LOGIC AND ARITHMETIC

BACK

logic gates are the parts a computer is made of.

combined in the right way, they enable the basic arithmetic operations a computer can do:
add, subtract, divide, and multiply.

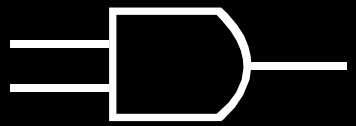

AND	0	1
0	0	0
1	0	1

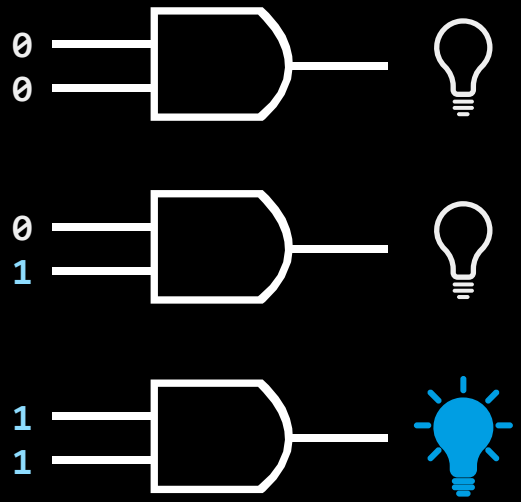

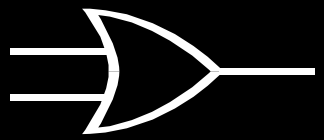

OR	0	1
0	0	1
1	1	1

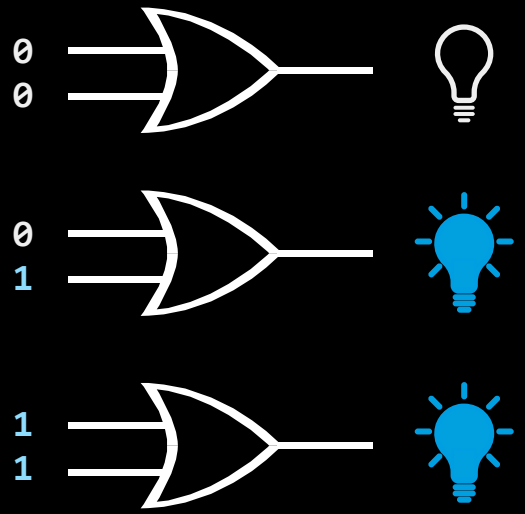

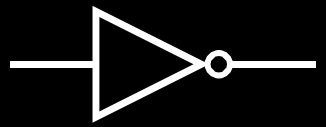

NOT	0	1
	1	0

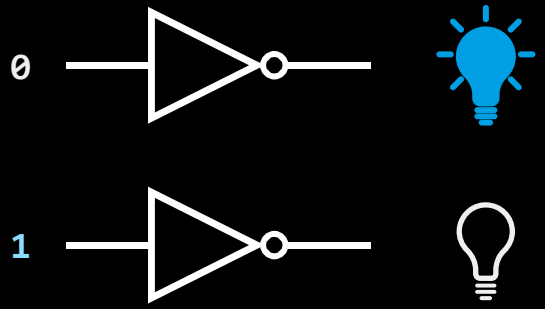

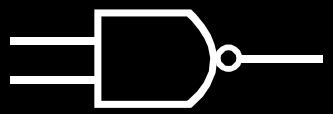

NAND	0	1
0	1	1
1	1	0

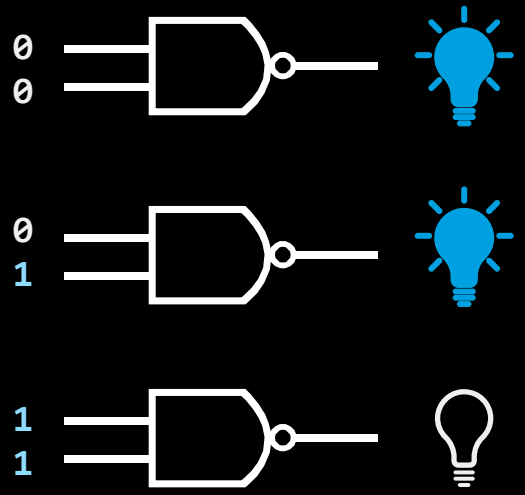

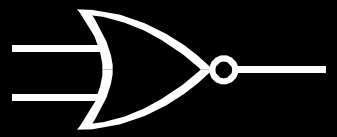

NOR	0	1
0	1	0
1	0	0

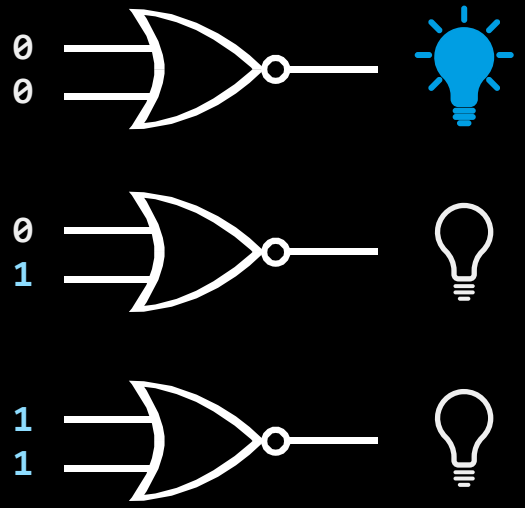

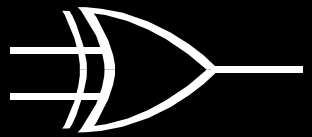

XOR	0	1
0	0	1
1	1	0

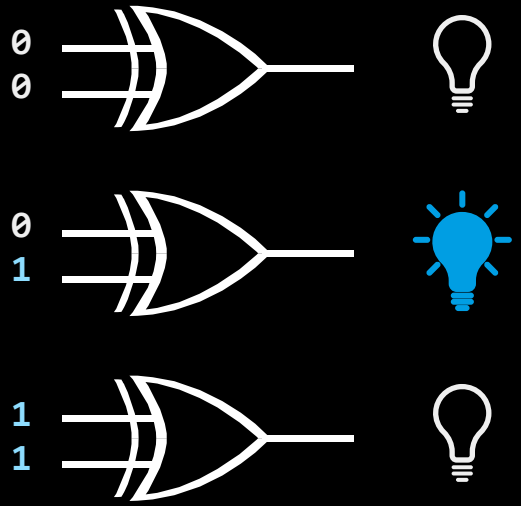

building a logic gate

both inputs off

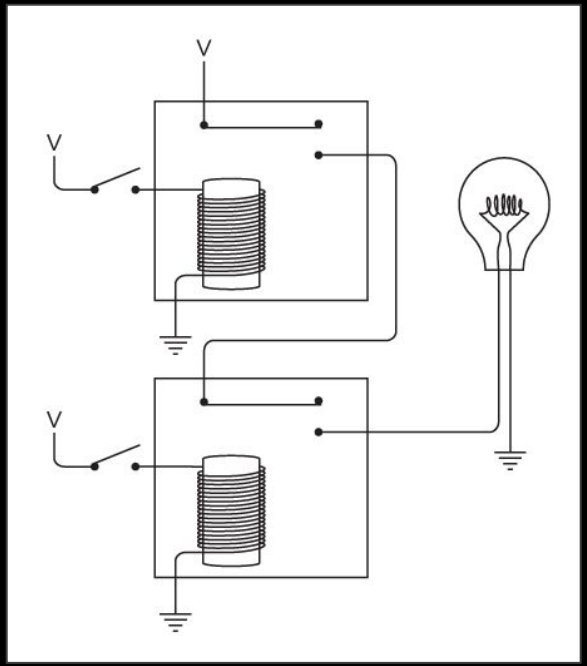

Image source: Petzold, Charles. Code: The Hidden Language of Computer Hardware and Software. 2nd ed., Microsoft Press, 2022.

both inputs off

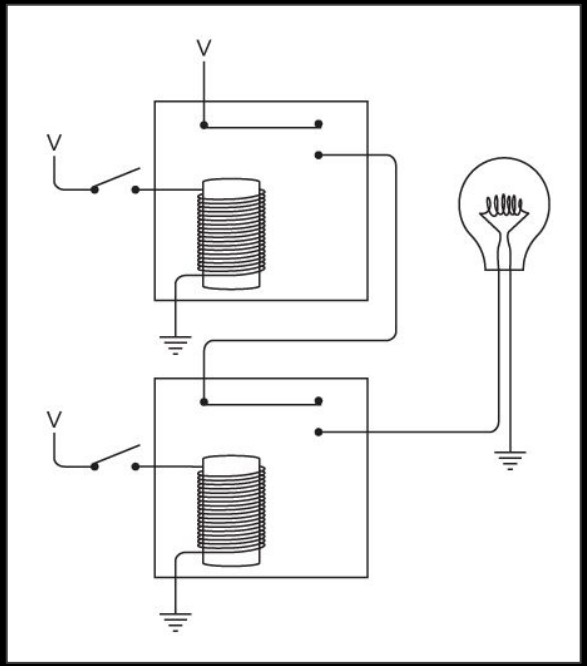

one input on

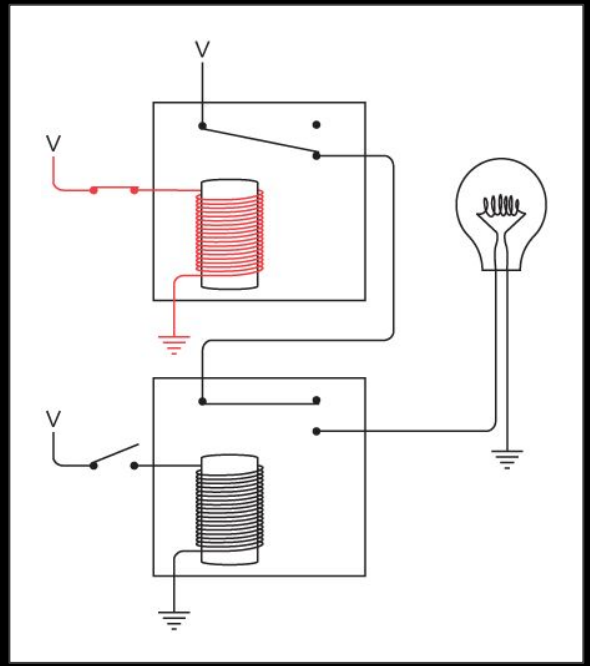

Image source: Petzold, Charles. Code: The Hidden Language of Computer Hardware and Software. 2nd ed., Microsoft Press, 2022.

the other input on

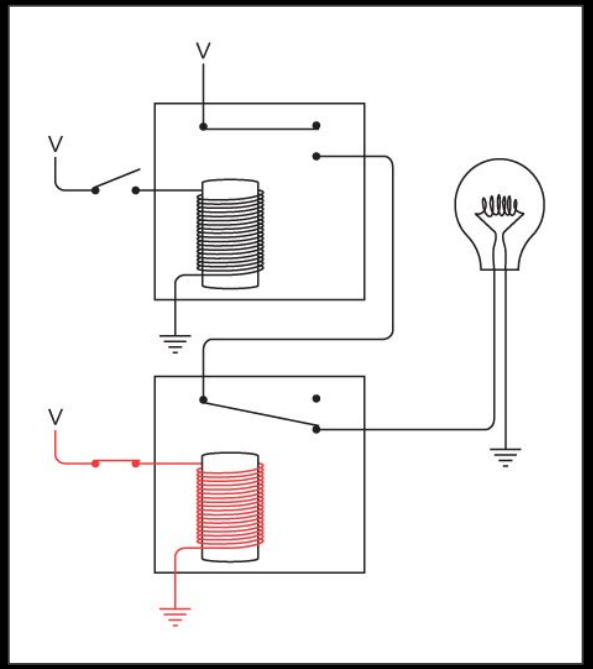

Image source: Petzold, Charles. Code: The Hidden Language of Computer Hardware and Software. 2nd ed., Microsoft Press, 2022.

the other input on

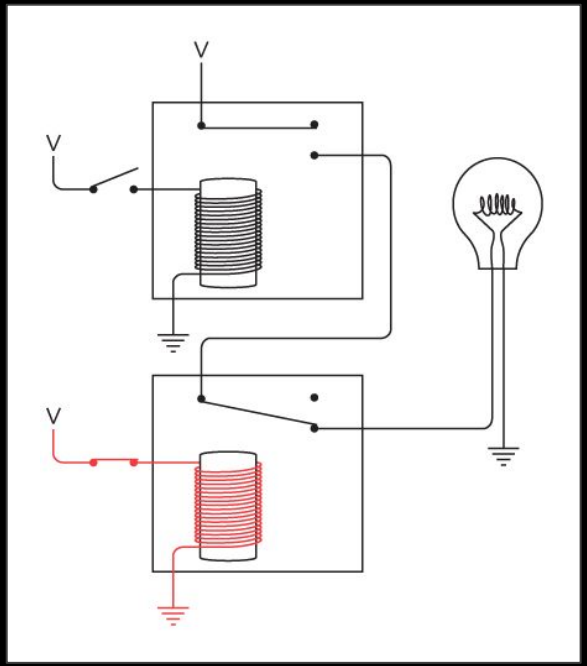

both inputs on

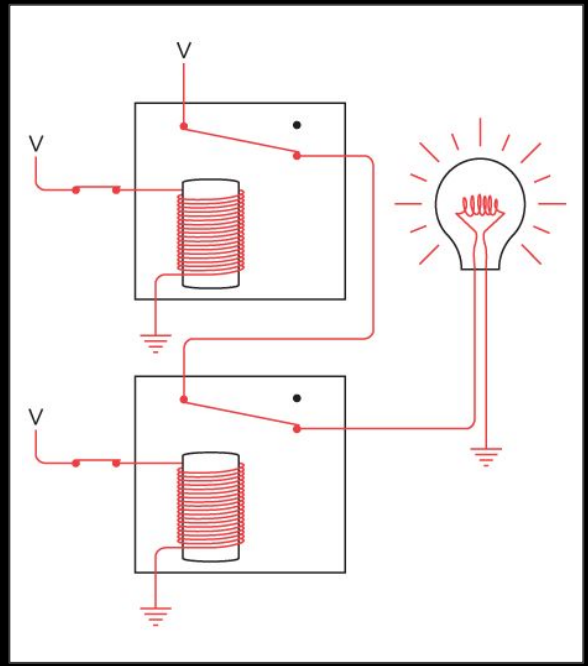

Image source: Petzold, Charles. Code: The Hidden Language of Computer Hardware and Software. 2nd ed., Microsoft Press, 2022.

binary addition

when you come right down to it, addition is just about the only thing that computers do.

if we can build something that adds, we're well on our way to building something that uses addition to also subtract, multiply, divide, calculate mortgage payments, guide rockets to Mars, play chess, and foul up our phone bills.

(Charles Petzold)

an 8-bit binary adding machine

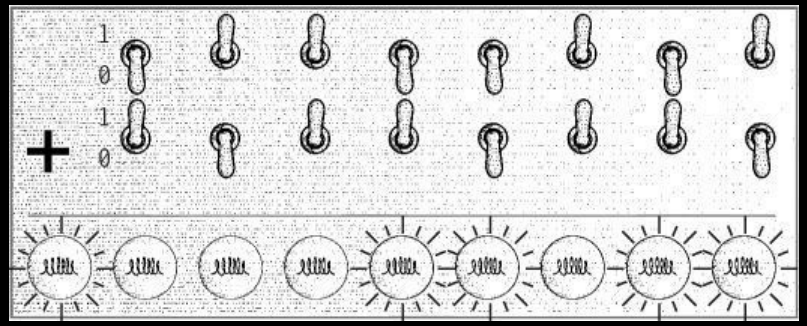

an 8-bit binary adding machine

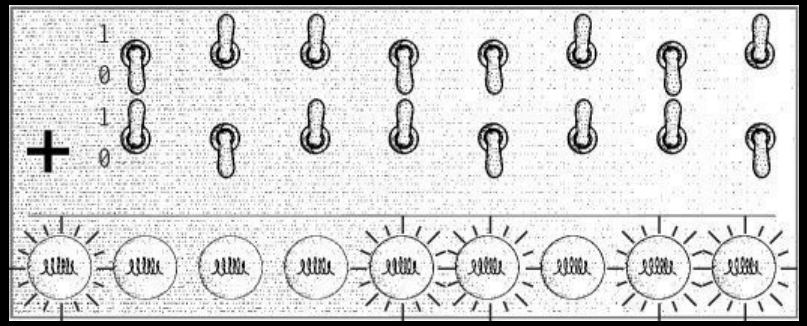

maximum result:

255 + 255 = 510

OR

1 1111 1110

How can we add two binary numbers?

```
  1 1 1 0
+ 1 0 1 0
---------
```

How can we add two binary numbers?

```
  1 1 1 0
+ 1 0 1 0
---------
        0
```

How can we add two binary numbers?

```
  1 1 1 0
+ 1 0 1 0
---------
      0 0
```

How can we add two binary numbers?

$$
\begin{array}{r}
1\ 1\ 1\ 0 \\
+\ 1\ 0_{1}\ 1\ 0 \\
\hline
0\ 0
\end{array}
$$

How can we add two binary numbers?

$$
\begin{array}{r}
1\ 1\ 1\ 0 \\
+\ 1\ 0_{1}\ 1\ 0 \\
\hline
0\ 0\ 0
\end{array}
$$

How can we add two binary numbers?

$$
\begin{array}{r}
1\ 1\ 1\ 0 \\
+\ 1_{1}\ 0_{1}\ 1\ 0 \\
\hline
0\ 0\ 0
\end{array}
$$

How can we add two binary numbers?

$$
\begin{array}{r}
1\ 1\ 1\ 0 \\
+\ 1_{1}\ 0_{1}\ 1\ 0 \\
\hline
1\ 0\ 0\ 0
\end{array}
$$

How can we add two binary numbers?

$$
\begin{array}{r}
1\ 1\ 1\ 0 \\
+\ 1_{1}\ 0_{1}\ 1\ 0 \\
\hline
1\ 1\ 0\ 0\ 0
\end{array}
$$

adding two bits

+	0	1
0		
1		

+	0	1
0	0	
1		

+	0	1
0	0	1
1		

+	0	1
0	0	1
1	1	

+	0	1
0	0	1
1	1	10

+	0	1
0	0	1
1	1	10

OR

+	0	1
0	00	01
1	01	10

+	0	1
0	0	1
1	1	10

OR

+	0	1
0	00	01
1	01	10

the digit on the right, we call the **sum bit**

the left digit, we call …?

+	0	1
0	0	1
1	1	10

OR

+	0	1
0	00	01
1	01	10

the digit on the right, we call the **sum bit**
the left digit, we call the **carry bit**

+	0	1
0	0 0	0 1
1	0 1	1 0

+	0	1
0	0 0	0 1
1	0 1	1 0

sum bit

+	0	1
0	0	1
1	1	0

+	0	1
0	0 0	0 1
1	0 1	1 0

sum bit

+	0	1
0	0	1
1	1	0

carry bit

+	0	1
0	0	0
1	0	1

+	0	1
0	0 0	0 1
1	0 1	1 0

sum bit

+	0	1
0	0	1
1	1	0

doesn’t this look familiar?

carry bit

+	0	1
0	0	0
1	0	1

+	0	1
0	0 0	0 1
1	0 1	1 0

sum bit

+	0	1
0	0	1
1	1	0

doesn’t this look familiar?

carry bit

+	0	1
0	0	0
1	0	1

AND	0	1
0	0	0
1	0	1

+	0	1
0	0 0	0 1
1	0 1	1 0

sum bit

+	0	1
0	0	1
1	1	0

XOR	0	1
0	0	1
1	1	0

doesn’t this look familiar?

carry bit

+	0	1
0	0	0
1	0	1

AND	0	1
0	0	0
1	0	1

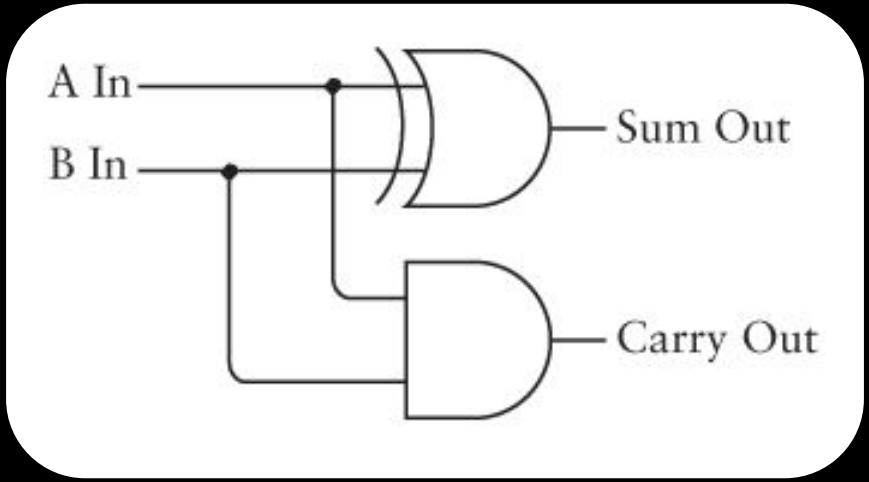

Image source: Petzold, Charles. Code: The Hidden Language of Computer Hardware and Software. 2nd ed., Microsoft Press, 2022.

bits A and B are inputs

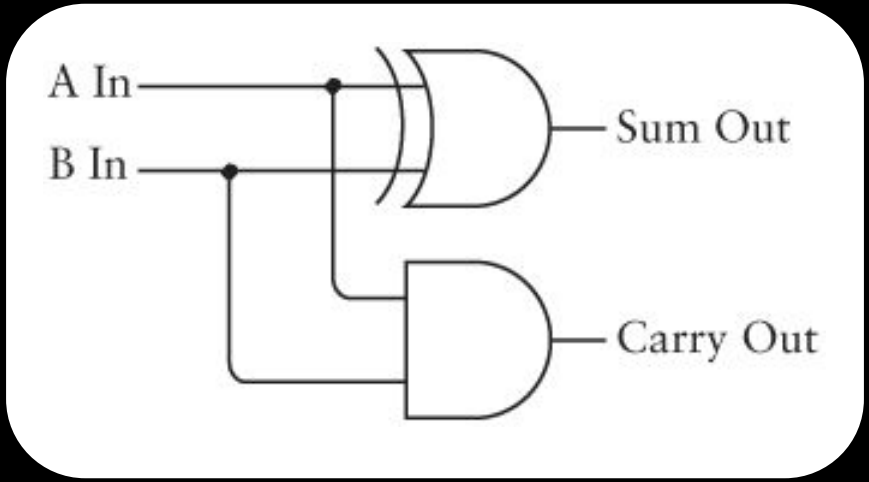

Image source: Petzold, Charles. Code: The Hidden Language of Computer Hardware and Software. 2nd ed., Microsoft Press, 2022.

bits A and B are inputs

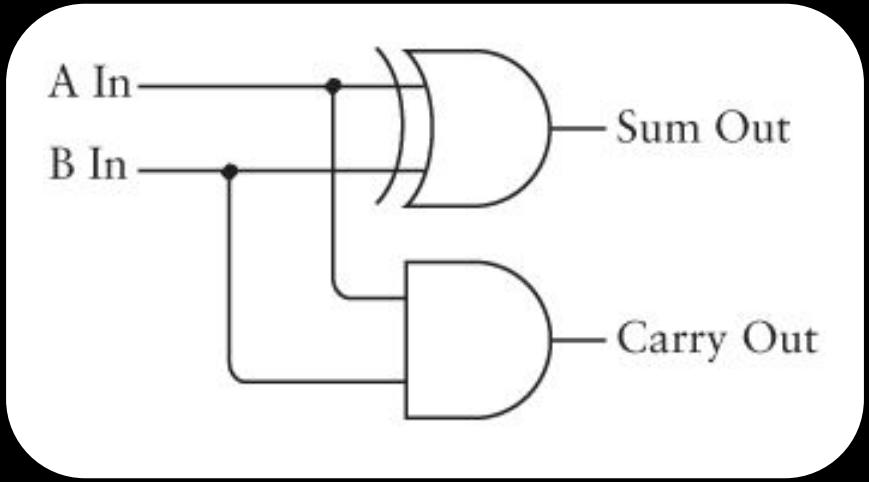

XOR gate computes sum bit

Image source: Petzold, Charles. Code: The Hidden Language of Computer Hardware and Software. 2nd ed., Microsoft Press, 2022.

bits A and B are inputs

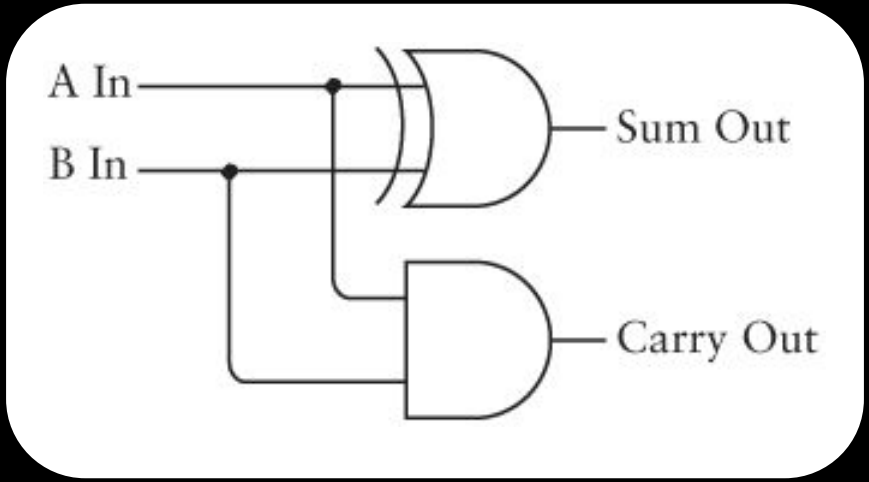

XOR gate computes sum bit

AND gate computes carry bit

Image source: Petzold, Charles. Code: The Hidden Language of Computer Hardware and Software. 2nd ed., Microsoft Press, 2022.

half adder

bits A and B
are inputs

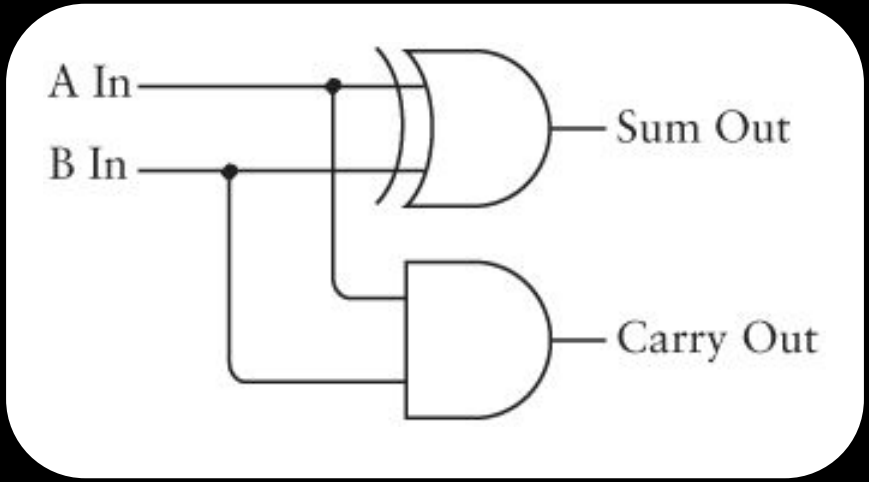

XOR gate
computes sum bit

AND gate
computes carry bit

Image source: Petzold, Charles. Code: The Hidden Language of Computer Hardware and Software. 2nd ed., Microsoft Press, 2022.

{a, b}
binary addition
{sum, carry}

half adder

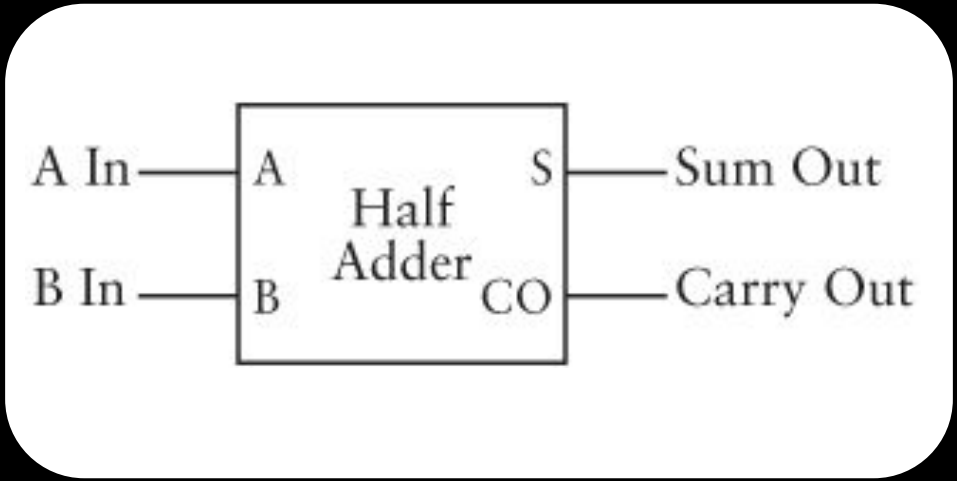

the half adder has no input for a carry bit.

Image source: Petzold, Charles. Code: The Hidden Language of Computer Hardware and Software. 2nd ed., Microsoft Press, 2022.

two half adder wired together make a full adder.

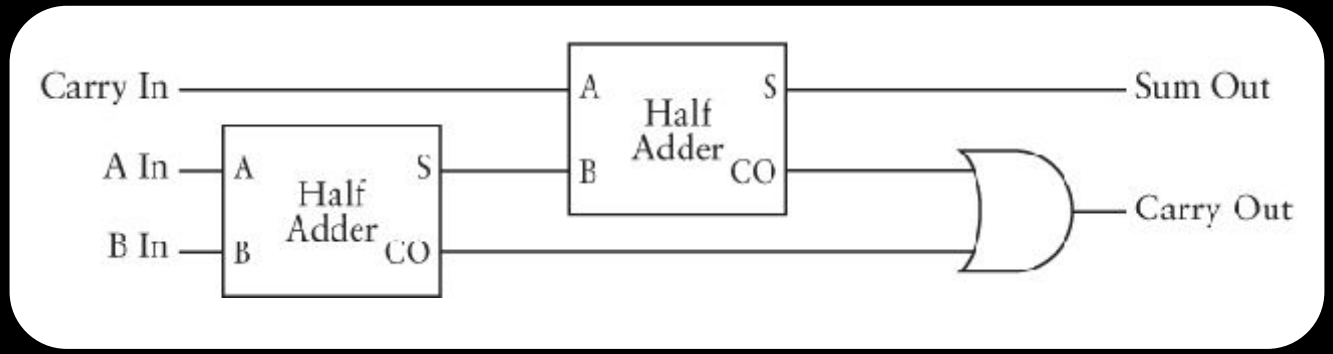

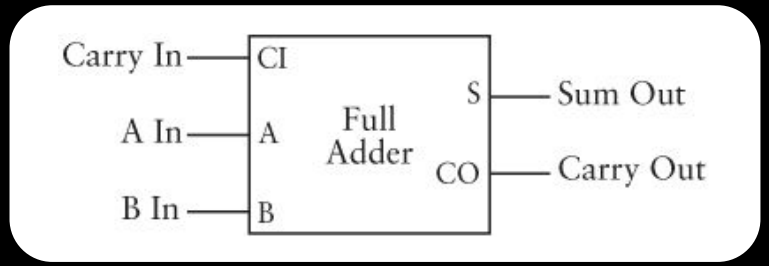

Image source: Petzold, Charles. Code: The Hidden Language of Computer Hardware and Software. 2nd ed., Microsoft Press, 2022.

so how to build this?

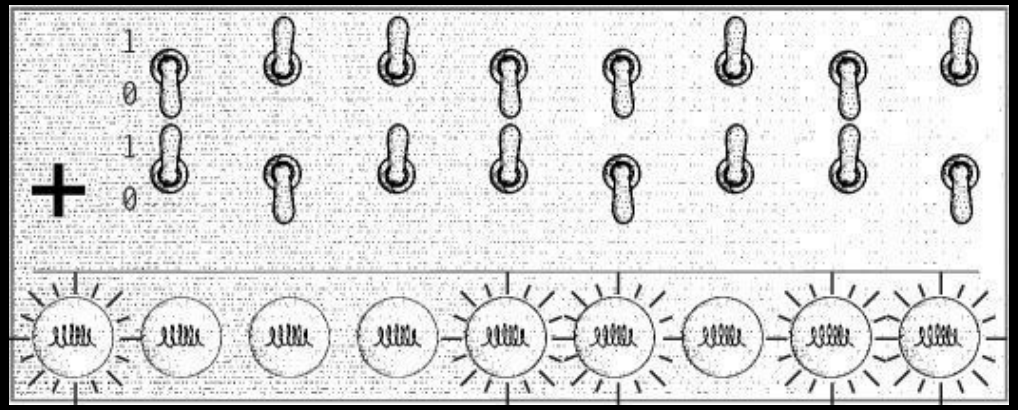

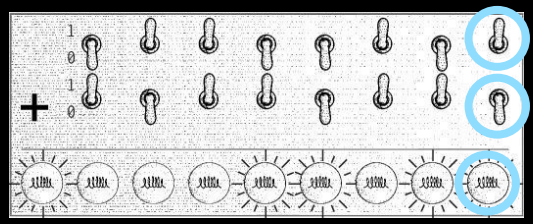

no carry bit for 1st digits

switch 1st byte, 1st digit **(1)**

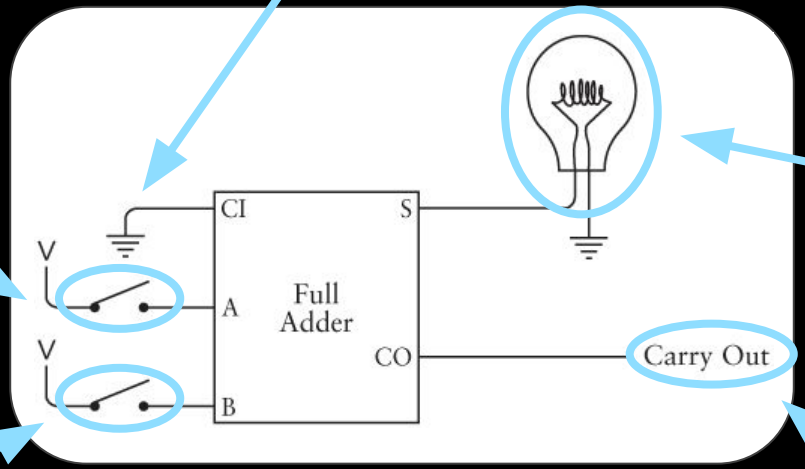

result for rightmost digit **(3)**

switch 2nd byte, 1st digit **(2)**

this is carried to the next full adder

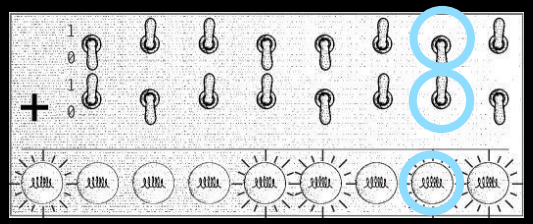

carry bit from 1st digits

result for 2nd rightmost digit **(3)**

switch 1st byte, 2nd digit **(1)**

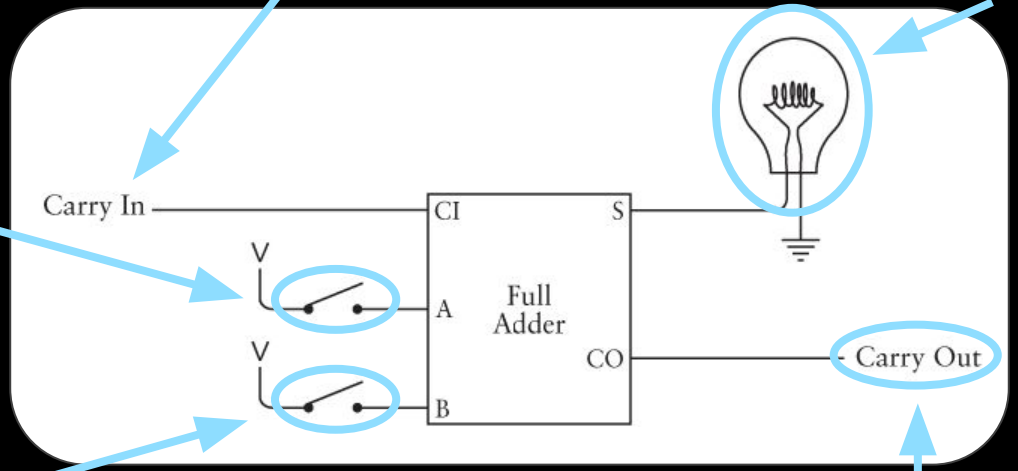

switch 2nd byte, 2nd digit **(2)**

this is carried to the next full adder

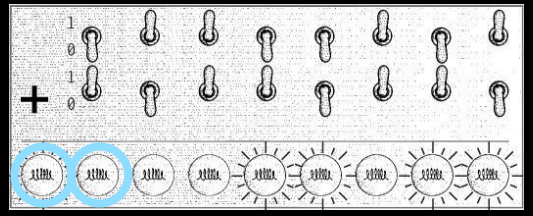

result for 8th digits **(3)**

carry bit from 7th digits

switch 1st byte, 8th digit **(1)**

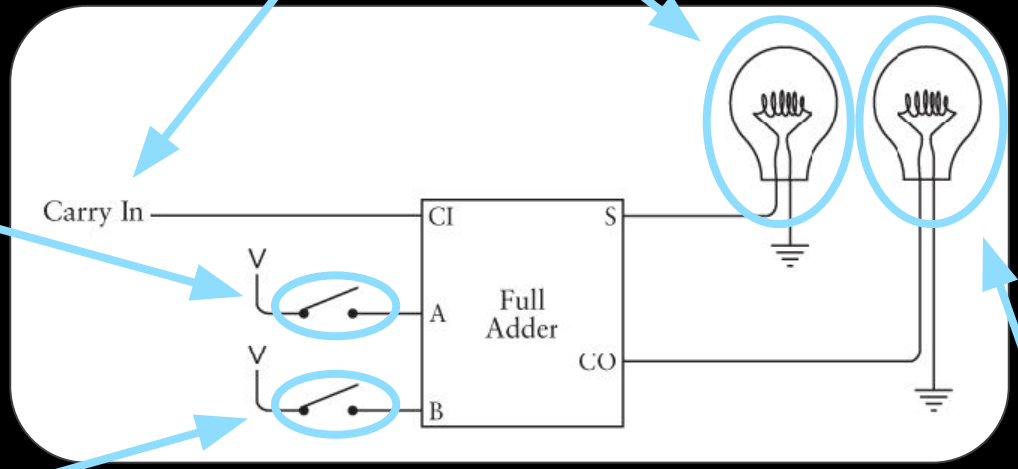

switch 2nd byte, 8th digit **(2)**

result for the 9th digit **(4)**

0 1 1 0 0 1 0 1

1 0 1 1 0 1 1 0

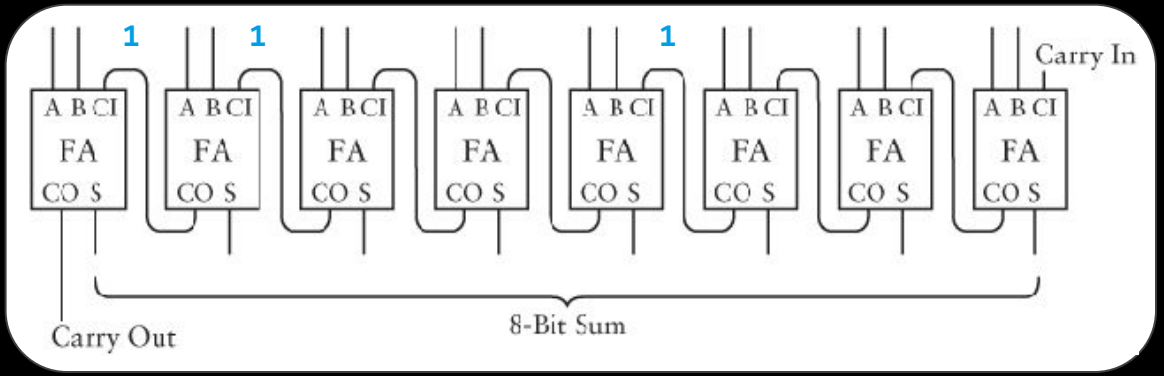

1 0 0 0 1 1 0 1 1